RS-232C Command Set for the XG-75, XG-75A, XG-110, XG-110LC, XG-135 and XG-135LC

Contents

Introduction

The Multisync® XG series projectors are all designed for multiple external communications. Either with other Multisync® peripherals such as the ISS-6020 Modular Switcher, or with external control devices like a computer or a complete control system by AMX or Crestron.

The Multisync® projectors contain multiple control ports. These control ports include a (15) pin **"Option"** port which provides RS-232 or RS-422 control. A (15) pin **"Remote 1"** port which allows external control from either a ISS-6020 Switcher or an third party external control. Communication can also be controlled through the **Infrared Windows** on the front and back of the projector or through the **"Remote 2" IN** wired jack. These ports accept commands from the included remotes, or from an third party external control device which can duplicate the commands of the remote.

The ISS-6020 Switcher also contains multiple control ports. These include a (15) pin **"Remote 1"** port, which is provided exclusively for connection to an NEC Multisync® Projector. A (15) pin **"Remote 2"** port, which provides RS-232 or RS-422 control. A (15) pin **"External Control"** port is provided for contact closure control of basic functions. Communication can also be achieved through the **Infrared Window** or **wired jack** on the front panel. All control options of the ISS-6020 can be used to control an NEC Multisync® Projector if connected in "System" mode.

Interface Condition

Serial communications system conforming to the RS-232C standard. (recommended)

Baud Rate: 4800/9600/19200/38400 bps (selective)
Data Length: 8 bits
Parity: Odd
Stop Bit: 1 bit
Communication Procedure: Full duplex *(Note: For simple projector control Half duplex is only needed. When using half duplex only the data is sent.)*

The default baud rate setting is 9600 bps.

Note: *If you use your projector in the Standalone condition, you can use any of the above baud rates. Only 4800 and 9600 are available when the projector is used in Switcher 1 Level, Switcher 2 Level and Multiple PJ.*

Control Data Format

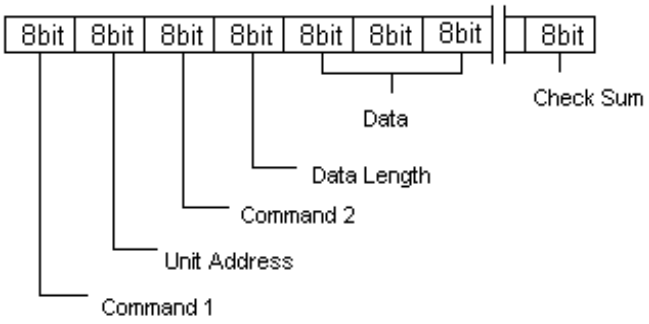

Command 1:	Code based on the command system.
Unit Address:	Hex code that represents the PJ address. (See explanation of "UA")
Command 2:	Code allocated to the functions of the projector.
Data Length:	Number of data bytes to be transmitted. (If the Data Length is 00H the Check Sum will follow the Data Length.)
Data:	Data that is transmitted. (Some commands will not have data to be transmitted)
Check Sum:	Lowest two hex digits of the sum total of the command through data.

Pin Configurations

Chart A shows the pin configuration for connection between the Multisync® Projectors and the ISS-6020 Switcher. This is also the pin configuration of the control cable (CTL6020) that is used to link the projector and switcher together (straight through configuration).

Chart A

NEC ISS-6020 Switcher			**NEC Multisync® Projector**	
"Remote 1" Port	**(15) Pin "HD"**		**"Remote 1" Port**	**(15) Pin "HD"**
Pin 1	**Receive Data +**	→	**Pin 1**	**Transmit Data +**
Pin 2	**Transmit Data +**	→	**Pin 2**	**Receive Data +**
Pin 3	**Req. to Send +**	→	**Pin 3**	**Clear to Send +**
Pin 4	No Connection		Pin 4	No Connection
Pin 5	No Connection		Pin 5	No Connection
Pin 6	**Receive Data -**	→	**Pin 6**	**Tranmit Data -**
Pin 7	**Transmit Data -**	→	**Pin 7**	**Receive Data -**
Pin 8	**Req. to Send -**	→	**Pin 8**	**Clear to Send -**
Pin 9	**ID Bit**	→	**Pin 9**	**ID Bit**
Pin 10	No Connection		Pin 10	No Connection
Pin 11	**Clear to Send +**	→	**Pin 11**	**Req. to Send +**
Pin 12	**Clear to Send -**	→	**Pin 12**	**Req. to Send -**
Pin 13	No Connection		Pin 13	No Connection
Pin 14	No Connection		Pin 14	No Connection
Pin 15	**Signal Ground**	→	**Pin 15**	**Signal Ground**

Chart B shows the pin configuration for linking up to eleven (11) switchers in a master and ten slave configuration. Communication between switchers must be RS-422. To change the switcher to RS-422 mode, the following steps must be performed:

1. Remove the System Control Module from the switcher.
2. Change S8603 to RS-422 mode.
3. Set Dip switches for master, slave configuration. (See Switcher Installation Manual)
4. Reinstall the System Control Module.

This procedure should be performed on all switchers, with the exception of the last in the chain if controlled through an RS-232 external control device.

Chart B

NEC ISS-6020 Switcher			NEC ISS-6020 Switcher	
"Remote 2" Port	(15) Pin "HD"		"Remote 1" Port	(15) Pin "HD"
Pin 1	**Transmit Data +**	→	**Pin 1**	**Receive Data +**
Pin 2	**Receive Data +**	→	**Pin 2**	**Transmit Data +**
Pin 3	**Clear to Send +**	→	**Pin 3**	**Req. to Send +**
Pin 4	No Connection		Pin 4	No Connection
Pin 5	No Connection		Pin 5	No Connection
Pin 6	**Tranmit Data -**	→	**Pin 6**	**Receive Data -**
Pin 7	**Receive Data -**	→	**Pin 7**	**Transmit Data -**
Pin 8	**Clear to Send -**	→	**Pin 8**	**Req. to Send -**
Pin 9	**ID Bit**	→	**Pin 9**	**ID Bit**
Pin 10	No Connection		Pin 10	No Connection
Pin 11	**Req. to Send +**	→	**Pin 11**	**Clear to Send +**
Pin 12	**Req. to Send -**	→	**Pin 12**	**Clear to Send -**
Pin 13	No Connection		Pin 13	No Connection
Pin 14	No Connection		Pin 14	No Connection
Pin 15	**Signal Ground**	→	**Pin 15**	**Signal Ground**

Chart C shows the pin configuration for linking sixty four (64) projectors. These links are operated and controlled through a single RS-232 or RS-422 control device.

Chart C

NEC Multisync® Projector			NEC Multisync® Projector	
"Remote 1" Port	(15) Pin "HD"		"Option" Port	(15) Pin "HD"
Pin 1	No Connection		Pin 1	No Connection
Pin 2	No Connection		Pin 2	No Connection
Pin 3	No Connection		Pin 3	No Connection
Pin 4	No Connection		Pin 4	No Connection
Pin 5	No Connection		Pin 5	No Connection
Pin 6	**Receive Data -**	→	**Pin 6**	**Transmit Data -**
Pin 7	**Transmit Data -**	→	**Pin 7**	**Receive Data -**
Pin 8	**Req. to Send -**	→	**Pin 8**	**Clear to Send -**
Pin 9	No Connection		Pin 9	No Connection
Pin 10	No Connection		Pin 10	No Connection
Pin 11	No Connection		Pin 11	No Connection
Pin 12	**Clear to Send -**	→	**Pin 12**	**Req. to Send -**
Pin 13	No Connection		Pin 13	No Connection
Pin 14	No Connection		Pin 14	No Connection
Pin 15	**Signal Ground**	→	**Pin 15**	**Signal Ground**

Chart D shows the pin configuration for connecting a control device like a computer to a NEC Multisync® Projector using the RS-232 Port. Chart E shows the same except that the connection is to the ISS-6020.

Chart D

RS-232 Computer Port			**NEC Multisync® Projector**	
RS-232 Port	**9-Pin "D"**		**Option Port**	**15-Pin "HD"**
Pin 2	**Receive Data**	→	**Pin 7**	**Transmit Data**
Pin 3	**Transmit Data**	→	**Pin 6**	**Receive Data**
Pin 1	No Connection			
Pin 4	No Connection			
Pin 5	**Signal Ground**	→	**Pin 15**	**Signal Ground**
Pin 6	No Connection			
Pin 7	**Request To Send**	→	**Pin 12**	**Clear To Send**
Pin 8	**Clear To Send**	→	**Pin 8**	**Request To Send**
Pin 9	No Connection			
Notes: Jumper "Request to Send" and "Clear to Send" together on both ends of the cable to simplify cable connection.				

Chart E

RS-232 Computer Port			**NEC ISS-6020 Switcher**	
RS-232 Port	**9-Pin "D"**		**Option Port**	**15-Pin "HD"**
Pin 1	No Connection			
Pin 2	**Receive Data**	→	**Pin 6**	**Transmit Data**
Pin 3	**Transmit Data**	→	**Pin 7**	**Receive Data**
Pin 4	No Connection			
Pin 5	**Signal Ground**	→	**Pin 15**	**Signal Ground**
Pin 6	No Connection			
Pin 7	**Request To Send**	→	**Pin 8**	**Clear To Send**
Pin 8	**Clear To Send**	→	**Pin 12**	**Request To Send**
Pin 9	No Connection			

Note: *Some RS-232 computer ports are wired differently. If you have difficulty with communications, consult the computer manufacturer for the correct pin out of the RS-232 port and make the necessary changes*

Although the charts above provide the solution to a majority of connections, external control devices from other manufacturers vary in actual pin configuration. The charts starting on page 5 provide the pin configuration for the communication ports on the NEC Multisync® Projectors and the ISS-6020 Switcher. Please consult the manufacturer of the external control device for the proper pin configuration of their equpment.

Because of distance limitations with the RS-232 communications standard, it is recommended that transmission distances over 20 feet be converted to RS-422. An RS-232/422 converter may be used. See the RS-422 pin out on page 5 for correct wiring..

NEC Multisync® Control Port Configuration

NEC Multisync® Projector

"Option" Port

RS-232 Configuration		RS-422 Configuration	
Pin 6	Receive Data	Pin 1	Receive Data +
Pin 7	Transmit Data	Pin 2	Transmit Data +
Pin 8	Request to Send	Pin 6	Receive Data -
Pin 12	Clear to Send	Pin 7	Transmit Data -
Pin 15	Signal Ground	Pin 15	Signal Ground

NEC Multisync® Projector

"Remote 1" Port

External Control (Contact Closure Control)

Pin #	SHORT/OPEN			FUNCTION
14	SHORT			External Control Mode ON
	OPEN			External Control Mode OFF
5	SHORT			POWER ON
	OPEN			POWER OFF
10	SHORT			PICTURE MUTE ON
	OPEN			PICTURE MUTE OFF
4,8, & 12	12	8	4	
	OPEN	OPEN	OPEN	INPUT A - RGB
	OPEN	OPEN	SHORT	INPUT A - VIDEO
	OPEN	SHORT	OPEN	INPUT A - S-VHS VIDEO
	OPEN	SHORT	SHORT	
	SHORT	OPEN	OPEN	INPUT B - (RGB when RGB INPUT installed) (VIDEO when used as VIDEO INPUT)
	SHORT	OPEN	SHORT	INPUT B - (RGB when RGB INPUT installed) (S-VIDEO when used as VIDEO INPUT)
	SHORT	SHORT	OPEN	INPUT C - (RGB when RGB INPUT installed) (VIDEO when used as VIDEO INPUT)
	SHORT	SHORT	SHORT	INPUT C - (RGB when RGB INPUT installed) (S-VIDEO when used as VIDEO INPUT)

NOTE: The term short means to connect with pin 15.

NOTE: When a contact closure is activated the corresponding control on the hand held Remote unit is disabled.

NOTE: Pin 13 is the external remote signal terminal. The projector can be controlled by the same format signal as the supplied remote control from the external controller regardless of the setting of pin 14.

NOTE: When turning the power on using the external control, short pin 5 about three seconds after supplying the AC power to the projector; when turning the power off using the external control, power off the AC supply to the projector about three seconds after opening pin 5. These procedures are to protect your projector and the connected equipment.

NEC ISS-6020 Switcher

"Remote 2" Port

RS-232 Configuration		RS-422 Configuration	
Pin 6	Transmit Data	Pin 1	Transmit Data +
Pin 7	Receive Data	Pin 2	Receive Data +
Pin 8	Clear to Send	Pin 6	Transmit Data -
Pin 12	Request to Send	Pin 7	Receive Data -
Pin 15	Signal Ground	Pin 15	Signal Ground

NEC ISS-6020 Switcher

"External Control" Port
(Contact Closure Control)

Pin #	SHORT/OPEN				FUNCTION
14	SHORT				Extenal Control Mode OFF
	OPEN				Extenal Control Mode ON
5	SHORT				POWER ON
	OPEN				POWER OFF
10	SHORT				PICTURE MUTE ON
	OPEN				PICTURE MUTE OFF
12	SHORT				SOUND MUTE ON
	OPEN				SOUND MUTE OFF
3,4,8 & 9	8	3	9	4	
	SHORT	SHORT	SHORT	SHORT	Slot 1
	OPEN	SHORT	SHORT	SHORT	Slot 2
	SHORT	OPEN	SHORT	SHORT	Slot 3
	OPEN	OPEN	SHORT	SHORT	Slot 4
	SHORT	SHORT	OPEN	SHORT	Slot 5
	OPEN	SHORT	OPEN	SHORT	Slot 6
	SHORT	OPEN	OPEN	SHORT	Slot 7
	OPEN	OPEN	OPEN	SHORT	Slot 8
	SHORT	SHORT	SHORT	OPEN	Slot 9
	OPEN	SHORT	SHORT	OPEN	Slot 10

NOTE: The term short means to connect with pin 15.

NOTE: When a contact closure is activated the corresponding control on the hand held Remote unit is disabled.

When using the Control Ports of the NEC Projectors or the ISS-6020 Switcher, do not connect any unused pins. Pins that are not used should be removed from the connector.

When a pin is noted as **"Short"**, it should be connected to Ground.

Signal Ground should be connected on all cables, and should be an overall shield.

When using an RS-232 or RS-422 External Control Device, control of up to (64) projectors or (11) switchers is possible for special applications. Multiple projector control allows simultaneous POWER ON, POWER OFF, INPUT SELECTION and other basic features. Individual control is also possible by accessing individual Projector UA codes, so that uploading and downloading setup information and projector setup controls may be accessed from a central location. Multiple switcher control allows up to (100) RGB, VGA or Video inputs to be accessed from a remote location, for display on an NEC Projector, or other display device.

For communication with multiple projectors in "STANDALONE" mode, the following connections should be made:

- RS-232 or RS-422 External Control Device to Projector Option Port
- Projector Remote 1 Port to Next Projector Option Port
- Repeat for each Projector (Up to 64)

Note: *Communication between projectors must be RS-422.*

Explanation of “UA” in each Command

The commands on the following pages refer to “UA”. “UA” is the Unit Address of the projector and is in Hex format. Below is a list with the PJ address and the corresponding “UA” address. (To change the PJ Address on the projector refer to the Projector Setup Manual)

PJ Address	UA Address	PJ Address	UA Address	PJ Address	UA Address
01	40H	23	56H	45	6CH
02	41H	24	57H	46	6DH
03	42H	25	58H	47	6EH
04	43H	26	59H	48	6FH
05	44H	27	5AH	49	70H
06	45H	28	5BH	50	71H
07	46H	29	5CH	51	72H
08	47H	30	5DH	52	73H
09	48H	31	5EH	53	74H
10	49H	32	5FH	54	75H
11	4AH	33	60H	55	76H
12	4BH	34	61H	56	77H
13	4CH	35	62H	57	78H
14	4DH	36	63H	58	79H
15	4EH	37	64H	59	7AH
16	4FH	38	65H	60	7BH
17	50H	39	66H	61	7CH
18	51H	40	67H	62	7DH
19	52H	41	68H	63	7EH
20	53H	42	69H	64	7FH
21	54H	43	6AH		
22	55H	44	6BH		

Explanation of “CKS” in each command.

“CKS” is the Check Sum of a command. The Check Sum data is in Hex format. Calculation of “CKS” is described below.

CKS = (Command 1) + (Unit Address) + (Command 2) + (Data Length) + (Data)

1. Add each Hex data from the top of the command to right before the “CKS”.
2. “CKS” is the last two Hex digits in the calculation result.

   Ex: 9F + 40 + 4E + 00 = 12D
   CKS = 2D (The 1 is omitted because you are only looking for the last 2 digits.)

Examples:

· Power On Command - PJ address is 01.

9FH UA 4EH 00H CKS

UA = 40H
9F + 40 + 4E + 00 = 12D **CKS = 2D**

Transmit Data: 9FH 40H 4EH 00H 2DH

· Power Off Command - PJ address is 01.

9FH UA 4FH 00H CKS

UA = 40H
9F + 40 + 4F + 00 = 12E **CKS = 2E**

Transmit Data: 9FH 40H 4FH 00H 2EH

Commands

PROJECTOR POWER ON: Turn on power to projector.					
	Command 1	**Unit Address**	**Command 2**	**Data Length**	**Check Sum**
Data	9F	UA	4E	00	CKS
Acknowledge	3F	UA	4E	00	CKS

PROJECTOR POWER OFF: Turn off power to projector.					
	Command 1	**Unit Address**	**Command 2**	**Data Length**	**Check Sum**
Data	9F	UA	4F	00	CKS
Acknowledge	3F	UA	4F	00	CKS

PICTURE MUTE ON: Turn on "PICTURE MUTE".					
	Command 1	**Unit Address**	**Command 2**	**Data Length**	**Check Sum**
Data	9F	UA	3D	00	CKS
Acknowledge	3F	UA	3D	00	CKS

PICTURE MUTE OFF: Turn off "PICTURE MUTE".					
	Command 1	**Unit Address**	**Command 2**	**Data Length**	**Check Sum**
Data	9F	UA	3C	00	CKS
Acknowledge	3F	UA	3C	00	CKS

SOUND MUTE ON: Turn on "SOUND MUTE".					
	Command 1	**Unit Address**	**Command 2**	**Data Length**	**Check Sum**
Data	9F	UA	3F	00	CKS
Acknowledge	3F	UA	3F	00	CKS

SOUND MUTE OFF: Turn off "SOUND MUTE".					
	Command 1	**Unit Address**	**Command 2**	**Data Length**	**Check Sum**
Data	9F	UA	3E	00	CKS
Acknowledge	3F	UA	3E	00	CKS

DISPLAY MUTE ON: Turn on "DISPLAY MUTE".					
	Command 1	**Unit Address**	**Command 2**	**Data Length**	**Check Sum**
Data	9F	UA	C5	00	CKS
Acknowledge	3F	UA	C5	00	CKS

DISPLAY MUTE OFF: Turn off "DISPLAY MUTE".					
	Command 1	**Unit Address**	**Command 2**	**Data Length**	**Check Sum**
Data	9F	UA	C4	00	CKS
Acknowledge	3F	UA	C4	00	CKS

PICTURE BRIGHT GAIN SET: **Se**t PICTURE BRIGHTNESS.

	Com. 1	Unit Ad.	Com. 2	Data Lgth.	DATA	DATA	DATA	DATA	DATA	DATA	Chk Sum
Data	DF	UA	BB	06	00	FF	00	FF	DATA 1	DATA 2	CKS
Acknowledge	7F	UA	BB	06	00	FF	00	FF	DATA 1	DATA 3	CKS

DATA 1: 00H - Absolute Value
01H - Relative change to existing value.
DATA 2: 00H ~ FFH - Used when DATA 1 is 00H
80H ~ 7FH - Used when DATA 1 is 01H
DATA 3: 00H - OK
Other - Range Over

PICTURE CONTRAST GAIN SET: Set PICTURE CONTRAST.

	Com. 1	Unit Ad.	Com. 2	Data Lgth.	DATA	DATA	DATA	DATA	DATA	DATA	Chk Sum
Data	DF	UA	BB	06	00	FF	01	FF	DATA 1	DATA 2	CKS
Acknowledge	7F	UA	BB	06	00	FF	01	FF	DATA 1	DATA 3	CKS

DATA 1: 00H - Absolute Value
01H - Relative change to existing value.
DATA 2: 00H ~ FFH - Used when DATA 1 is 00H
80H ~ 7FH - Used when DATA 1 is 01H
DATA 3: 00H - OK
Other - Range Over

PICTURE COLOR GAIN SET: Set PICTURE COLOR.

	Com. 1	Unit Ad.	Com. 2	Data Lgth.	DATA	DATA	DATA	DATA	DATA	DATA	Chk Sum
Data	DF	UA	BB	06	00	FF	02	FF	DATA 1	DATA 2	CKS
Acknowledge	7F	UA	BB	06	00	FF	02	FF	DATA 1	DATA 3	CKS

DATA 1: 00H - Absolute Value
01H - Relative change to existing value.
DATA 2: 00H ~ FFH - Used when DATA 1 is 00H
80H ~ 7FH - Used when DATA 1 is 01H
DATA 3: 00H - OK
Other - Range Over

PICTURE SHARPNESS GAIN SET: Set PICTURE SHARPNESS.

	Com. 1	Unit Ad.	Com. 2	Data Lgth.	DATA	DATA	DATA	DATA	DATA	DATA	Chk Sum
Data	DF	UA	BB	06	00	FF	03	FF	DATA 1	DATA 2	CKS
Acknowledge	7F	UA	BB	06	00	FF	03	FF	DATA 1	DATA 3	CKS

DATA 1: 00H - Absolute Value
01H - Relative change to existing value.
DATA 2: 00H ~ FFH - Used when DATA 1 is 00H
80H ~ 7FH - Used when DATA 1 is 01H
DATA 3: 00H - OK
Other - Range Over

PICTURE TINT GAIN SET: Set PICTURE TINT.

	Com. 1	Unit Ad.	Com. 2	Data Lgth.	DATA	DATA	DATA	DATA	DATA	DATA	Chk Sum
Data	DF	UA	BB	06	00	FF	04	FF	DATA 1	DATA 2	CKS
Acknowledge	7F	UA	BB	06	00	FF	04	FF	DATA 1	DATA 3	CKS

DATA 1: 00H - Absolute Value
01H - Relative change to existing value.
DATA 2: 00H ~ FFH - Used when DATA 1 is 00H
80H ~ 7FH - Used when DATA 1 is 01H
DATA 3: 00H - OK
Other - Range Over

SCAN CHANGE: Switching input signals.							
	Command 1	**Unit Address**	**Command 2**	**Data Length**	**DATA**	**DATA**	**Check Sum**
Data	DF	UA	B0	02	DATA 1	DATA 2	CKS
Acknowledge	7F	UA	B0	01	DATA 3	-	CKS

DATA 1: Switch Mode
00H - Direct switch.(Equal to remote controller 10 keys operation.)
01H - Switch according to INPUT LIST number.

DATA 2: Switching Number
When DATA 1 is “00H”, switch according to the data in the CHART 1.
When DATA 1 is “01H”, switch according to INPUT LIST number. (00-99) See CHART 2

DATA 3: “FFH” when the projector cannot execute a scan change.
Anything other than “FFH” means the projector successfully completed the scan change.

CHART 1:

Setting Condition			
DATA 2	**PJ Standalone**	**Switcher Level 1**	**Switcher Level 2**
01H	INPUT A RGB	M-01	-
02H	INPUT A VIDEO	M-02	-
03H	INPUT A S-VIDEO	M-03	-
04H	INPUT B RGB/VIDEO	M-04	-
05H	INPUT B S-VIDEO	M-05	-
06H	-	M-06	-
07H	INPUT C RGB/VIDEO	M-07	-
08H	INPUT C S-VIDEO	M-08	-
09H	-	M-09	-
0AH	-	M-10	-
~	~	~	~
11H	-	-	M-01 S-01
12H	-	-	M-01 S-02
13H	-	-	M-01 S-03
14H	-	-	M-01 S-04
15H	-	-	M-01 S-05
16H	-	-	M-01 S-06
17H	-	-	M-01 S-07
18H	-	-	M-01 S-08
19H	-	-	M-01 S-09
1AH	-	-	M-01 S-10
~	~	~	~
21H	-	-	M-02 S-01
22H	-	-	M-02 S-02
~	~	~	~
A9H	-	-	M-10 S-09
AAH	-	-	M-10 S-10

CHART 2:

DATA 2	Input List #	DATA 2	Input List #	DATA 2	Input List #	DATA 2	Input List #
00H	01	19H	26	32H	51	4BH	76
01H	02	1AH	27	33H	52	4CH	77
02H	03	1BH	28	34H	53	4DH	78
03H	04	1CH	29	35H	54	4EH	79
04H	05	1DH	30	36H	55	4FH	80
05H	06	1EH	31	37H	56	50H	81
06H	07	1FH	32	38H	57	51H	82
07H	08	20H	33	39H	58	52H	83
08H	09	21H	34	3AH	59	53H	84
09H	10	22H	35	3BH	60	54H	85
0AH	11	23H	36	3CH	61	55H	86
0BH	12	24H	37	3DH	62	56H	87
0CH	13	25H	38	3EH	63	57H	88
0DH	14	26H	39	3FH	64	58H	89
0EH	15	27H	40	40H	65	59H	90
0FH	16	28H	41	41H	66	5AH	91
10H	17	29H	42	42H	67	5BH	92
11H	18	2AH	43	43H	68	5CH	93
12H	19	2BH	44	44H	69	5DH	94
13H	20	2CH	45	45H	70	5EH	95
14H	21	2DH	46	46H	71	5FH	96
15H	22	2EH	47	47H	72	60H	97
16H	23	2FH	48	48H	73	61H	98
17H	24	30H	49	49H	74	62H	99
18H	25	31H	50	4AH	75	63H	00

RS-232 Command Codes with Check Sum

The hex codes below are only valid when the projectors address code is set to 01 (factory default) in the OPTION menu.

Switcher Level 1 and Standalone Operations					
Power ON					
	Com. 1	**Unit Ad.**	**Com. 2**	**Data Lgth.**	**Chk Sum**
Data	9F	40	4E	00	2D
Acknowledge	3F	40	4E	00	CD
Power OFF					
	Com. 1	**Unit Ad.**	**Com. 2**	**Data Lgth.**	**Chk Sum**
Data	9F	40	4F	00	2E
Acknowledge	3F	40	4F	00	CE

Switcher Level 1 and Standalone Operations					
PIC. MUTE ON					
	Com. 1	**Unit Ad.**	**Com. 2**	**Data Lgth.**	**Chk Sum**
Data	9F	40	3D	00	1C
Acknowledge	3F	40	3D	00	BC
PIC. MUTE OFF					
	Com. 1	**Unit Ad.**	**Com. 2**	**Data Lgth.**	**Chk Sum**
Data	9F	40	3C	00	1B
Acknowledge	3F	40	3C	00	BB
DISPLAY MUTE ON					
	Com. 1	**Unit Ad.**	**Com. 2**	**Data Lgth.**	**Chk Sum**
Data	9F	40	C5	00	A4
Acknowledge	3F	40	C5	00	B4
DISPLAY MUTE OFF					
	Com. 1	**Unit Ad.**	**Com. 2**	**Data Lgth.**	**Chk Sum**
Data	9F	40	C4	00	A3
Acknowledge	3F	40	C4	00	B3

Standalone Operation							
Input A RGB							
	Com. 1	**Unit Ad.**	**Com. 2**	**Data Lgth.**	**DATA**	**DATA**	**Chk Sum**
Data	DF	40	B0	02	00	01	D2
Input A Video							
	Com. 1	**Unit Ad.**	**Com. 2**	**Data Lgth.**	**Chk Sum**		
Data	DF	40	B0	02	00	02	D3
Input A S-VHS Video							
	Com. 1	**Unit Ad.**	**Com. 2**	**Data Lgth.**	**DATA**	**DATA**	**Chk Sum**
Data	DF	40	B0	02	00	03	D4
Input B RGB \ Video							
	Com. 1	**Unit Ad.**	**Com. 2**	**Data Lgth.**	**Chk Sum**		
Data	DF	40	B0	02	00	04	D5
Input B S-VHS Video							
	Com. 1	**Unit Ad.**	**Com. 2**	**Data Lgth.**	**DATA**	**DATA**	**Chk Sum**
Data	DF	40	B0	02	00	05	D6
Input C RGB \ Video							
	Com. 1	**Unit Ad.**	**Com. 2**	**Data Lgth.**	**Chk Sum**		
Data	DF	40	B0	02	00	07	D8
Input C S-VHS Video							
	Com. 1	**Unit Ad.**	**Com. 2**	**Data Lgth.**	**DATA**	**DATA**	**Chk Sum**
Data	DF	40	B0	02	00	08	D9

Switcher Level 1 Operation

Module 1 Input Selection

	Com. 1	Unit Ad.	Com. 2	Data Lgth.	DATA	DATA	Chk Sum
Data	DF	40	B0	02	00	01	D2

Module 2 Input Selection

	Com. 1	Unit Ad.	Com. 2	Data Lgth.	Chk Sum		
Data	DF	40	B0	02	00	02	D3

Module 3 Input Selection

	Com. 1	Unit Ad.	Com. 2	Data Lgth.	DATA	DATA	Chk Sum
Data	DF	40	B0	02	00	03	D4

Module 4 Input Selection

	Com. 1	Unit Ad.	Com. 2	Data Lgth.	Chk Sum		
Data	DF	40	B0	02	00	04	D5

Module 5 Input Selection

	Com. 1	Unit Ad.	Com. 2	Data Lgth.	DATA	DATA	Chk Sum
Data	DF	40	B0	02	00	05	D6

Module 6 Input Selection

	Com. 1	Unit Ad.	Com. 2	Data Lgth.	Chk Sum		
Data	DF	40	B0	02	00	06	D7

Module 7 Input Selection

	Com. 1	Unit Ad.	Com. 2	Data Lgth.	DATA	DATA	Chk Sum
Data	DF	40	B0	02	00	07	D8

Module 8 Input Selection

	Com. 1	Unit Ad.	Com. 2	Data Lgth.	DATA	DATA	Chk Sum
Data	DF	40	B0	02	00	08	D9

Module 9 Input Selection

	Com. 1	Unit Ad.	Com. 2	Data Lgth.	DATA	DATA	Chk Sum
Data	DF	40	B0	02	00	09	DA

Module 10 Input Selection

	Com. 1	Unit Ad.	Com. 2	Data Lgth.	DATA	DATA	Chk Sum
Data	DF	40	B0	02	00	0A	DB

Switcher Level 1 Operation

SOUND MUTE ON

	Com. 1	Unit Ad.	Com. 2	Data Lgth.	Chk Sum
Data	9F	40	3F	00	1E
Acknowledge	3F	40	3F	00	BE

SOUND MUTE OFF

	Com. 1	Unit Ad.	Com. 2	Data Lgth.	Chk Sum
Data	9F	40	3E	00	1D
Acknowledge	3F	40	3E	00	BD